VAN ELECTRICAL DIAGRAM

JOEY THE NOMAD

*WIRE SIZES ARE THE SAME ON POSITIVE AND NEGATIVE

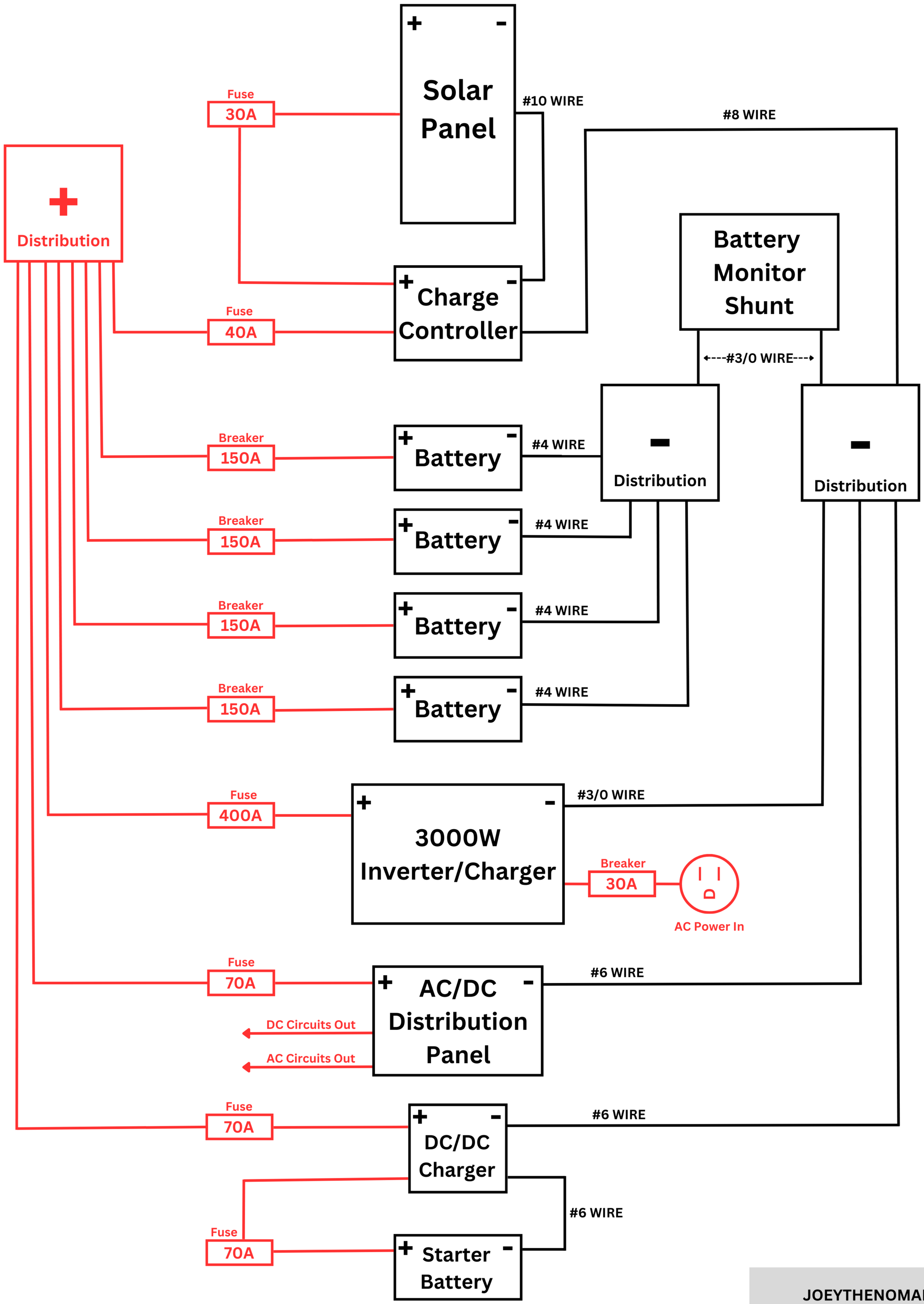

JOEYTHENOMAD.COM